Stellaris® EM2 Expansion Board for Development Kits

The Stellaris® EM2 Expansion Board (DK-LM3S9B96-EM2) from Texas Instruments is an optional expansion board which connects directly to the External Peripheral Interface (EPI) port of the Stellaris DK-LM3S9B96 and DK-LM3S9D96 development boards. The EM2 expansion board provides a transition between the Stellaris External Peripheral Interface (EPI) connector and the RF Evaluation Module (EM) connector. The DK-LM3S9B96-EM2 enables wireless application development using Low Power RF (LPRF), RF ID, and Bluetooth® evaluation modules on the Stellaris DK-LM3S9B96 and DK-LM3S9D96 platforms.

The DK-LM3S9B96 and DK-LM3S9D96 development boards (each sold separately) provide a complete platform for evaluating the LM3S9000 series of Stellaris microcontrollers, featuring extensive connectivity options such as 10/100 Ethernet, Controller Area Network (CAN), Universal Serial Bus (USB) Full Speed On-The-Go, and Inter-IC Sound (I^2S).

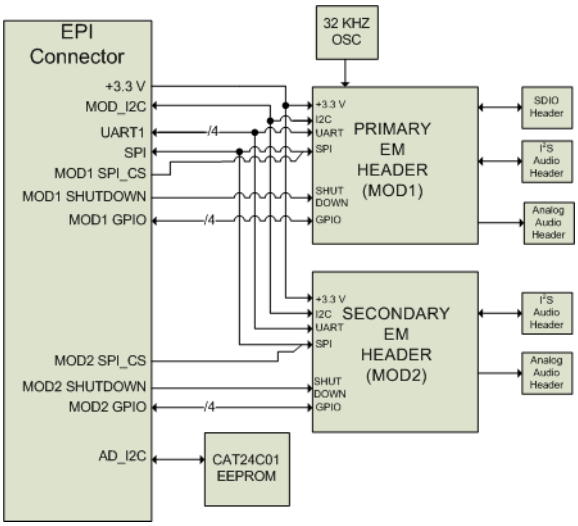

Stellaris® DK-LM3S9B96-EM2 Block Diagram

Features

The EM2 expansion board has the following features:

- 2 sets of EM connectors to support up to 2 RF evaluation modules
- 1 kilobit of I^2C memory for storing configuration data and EM2 expansion board detection
- EM digital and analog audio signal headers
- EM MOD1 SDIO connection headers
- 32 Khz oscillator for slow clock source to primary EM2 expansion board connector

Stellaris® EM2 Expansion Board

Package Contents

When combined with a DK-LM3S9B96 or DK-LM3S9D96 Development Kit, the EM2 expansion board provides the baseboard needed to develop and prototype wireless embedded applications. This package includes:

- Stellaris® DK-LM3S9B96-EM2 Expansion Board

Stellaris® EM2 Expansion Board Attached to DK-LM3S9x96 Development Board (sold separately)

DK-LM3S9B96-EM2 (continued)

Optional Wireless Development Kits Available

In order to develop and prototype wireless embedded applications out-of-the-box, Texas Instruments has also created a series of wireless development kits that combine a Stellaris® EM2 Expansion Board with other items as required to implement a full example of the featured wireless network. These wireless development kits focus on low power RF network type and a single protocol.

Ordering Information

Product Number	Description
DK-LM3S9B96-EM2	Stellaris® EM2 Expansion Board for Development Kits

The DK-LM3S9B96-EM2 works with either of these two Stellaris Development Kits (each sold separately)

DK-LM3S9B96	Stellaris® LM3S9B96 Microcontroller Development Kit (Tempest class)
DK-LM3S9D96	Stellaris® LM3S9D96 Microcontroller Development Kit (Firestorm class)

Stellaris® Wireless Kits (each sold separately)

DK-EM2-2500S	DK-EM2-7960R	DK-EM2-2520Z	DK-EM2-2560B
			
Stellaris® 2.4 GHz SimpliciTI Wireless Kit (includes CC2500 Evaluation Module Kit and DK-LM3S9B96-EM2 Expansion Board) www.ti.com/dk-em2-2500s	**Stellaris® 13.56 MHz RFID Wireless Kit** (includes TRF7960TB Evaluation Module and DK-LM3S9B96-EM2 Expansion Board) www.ti.com/dk-em2-7960r	**Stellaris® 2.4 GHz ZigBee Wireless Kit** (includes CC2520 Evaluation Module Kit and DK-LM3S9B96-EM2 Expansion Board) www.ti.com/dk-em2-2520z	Stellaris® 2.4 GHz CC2560 *Bluetooth*® Wireless Kit (includes CC2560 *Bluetooth*® Transceiver and DK-LM3S9B96-EM2 Expansion Board) www.ti.com/dk-em2-2560b

For more information on Stellaris wireless solutions: www.ti.com/stellariswireless

Texas Instruments • 108 Wild Basin, Suite 350 • Austin, TX 78746
http://www.ti.com/stellaris