NO	DESCRIPTION	DATE
1	ADD WASHER	07.02.04

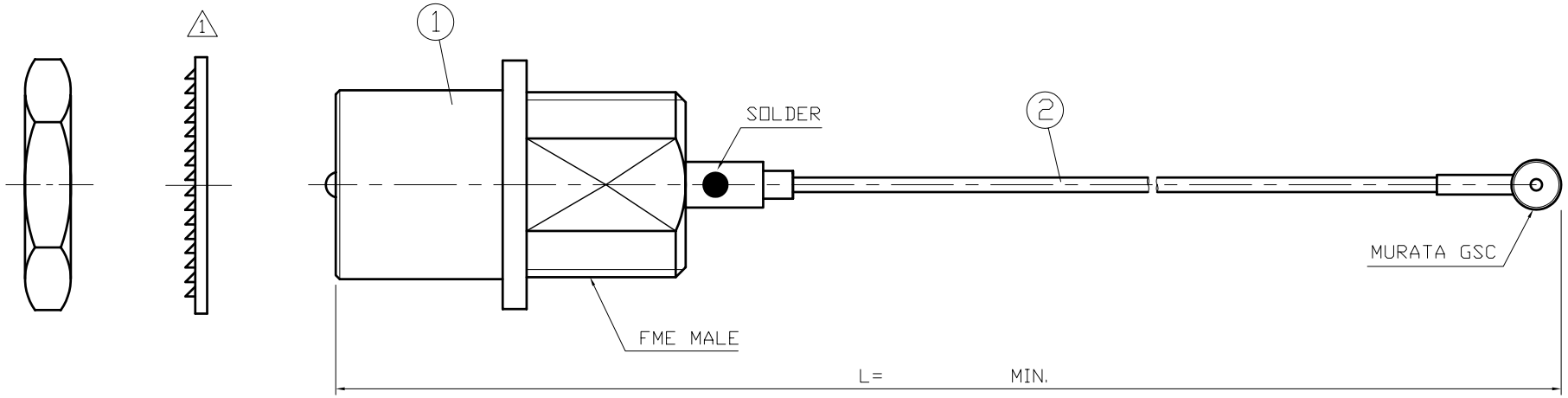

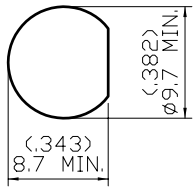

MOUNTING HOLE

NOTES: UNLESS OTHERWISE SPECIFIED
1. BODIES: BRASS PER JIS-C3604
2. PIN: BRASS PER JIS-C3604
   BERYLLIUM COPPER PER JIS-C1730B
3. INSULATION: TEFLON PER ASTM D1457 AND ASTM D1710
4. PART TO BE CLEAN AND FREE OF BURRS

NO	DESCRIPTION	Q'TY	FINISH
2	MURATA GSC	1	MURATA 0.4D
1	23-38 0.83(50Ω)	1	

製圖	DRAWN Elvis	TOLERANCE		品名 TITLE	Murata GSC-FME B/H 110mm		日期	DATE 02.22.02	版次 REV. A-1
		.X	±0.2						
檢圖	CHECK Monica	.XX	±0.1	單位	UNIT mm(in)	DWG.NO. ADA-3001-110			
		.XXX	±0.05						
認定	APPROVAL Lewis	ANGLE	±5°	比例	SCALE 4:1	ADACTUS			